Symbols Used

⚠	This mark denotes issues that may affect the IR camera's operation.
ℹ	This mark denotes additional topics that complement the basic operation procedures.
💡	This mark denotes complement material or operation procedures.

Trademark Acknowledgments

- SATIR is trademarks of SATIR Europe (Ireland) Company Limited
- Other names and products not mentioned above may be registered trademarks of trademarks of their respective companies.

Read This First	Introduction of safety precautions and warnings when using the IR camera.
Component Guide Preparing the IR Camera	Introduction of IR camera components and batteries charging and loading.
User Guide	Describing how to work with the IR camera, including each analysis tools and settings
Troubleshooting	Describing how to solve problems
Appendix	Describing how to maintain the IR camera and introduce related materials' emissivity
Specification	Describing the specification of V80 **You must read this section before connecting your camera to a computer.**

Contents

Read This First

Test Shots

Before you try to shoot important subjects, we highly recommend that you shoot several trial images to confirm that you are able to operate the IR camera correctly.

For very accurate results, we recommend that you wait 5 minutes after you have started the camera before measuring a temperature. For cameras where the detector is cooled by a mechanical cooler, this time period excludes the time it takes to cool down the detector.

Please note that SATIR, its subsidiaries and affiliates, and its distributors are not liable for any consequential damages arising from any malfunction of an IR camera or accessory, including CompactFlash™ cards, which results in the failure of an image to be recorded or to be recorded in a format that is machine readable.

Warning Against Copyright Infringement

Safety Precautions

Before using the camera, please ensure that you read and understand the safety precautions described below. Always ensure that the IR camera is operated correctly.

The safety precautions noted on the following pages are intended to instruct you in the safe and correct operation of the IR camera and its accessories to prevent injuries or damage to yourself, other persons and equipment.

Warnings

Read on to learn about using IR camera properly.

- **Avoid damaging eyesight.**

Warning:

- Do not trigger the laser pointer in human or animal eyes. Exposure to the laser produced by the laser pointer may damage eyesight.

- **Do not disassemble.**
  Do not attempt to disassemble or alter any part of the equipment that is not expressly described in this guide.

- **Stop operating immediately if it emits smoke or noxious fumes.**
  Failure to do so may result in fire or electrical shock. Immediately turn the power off and remove the battery or unplug the power cord from the power outlet. Confirm that smoke and fume emissions have ceased.

- **Stop operating immediately if it is dropped or the casing is damaged.**
  Failure to do so may result in fire or electrical shock. Immediately turn the power off and remove the battery or unplug the power cord from the power outlet.

- **Do not use substances containing alcohol, benzene, thinners or other flammable substances to clean or main the IR camera.**
  The use of these substances may lead to fire.

- **Remove the power cord on a regular periodic basis and wipe away the dust and dirt that collects on the plug, the exterior of the power outlet and the surrounding area.**
  In dust, humid or greasy environments, the dust that collects around the plug over long periods of time may become saturated with humidity and short-circuit, leading to fire.

- **Do not handle the power cord if your hands are wet.**
  Handling it with wet hands may lead to electrical shock. When unplugging the cord, ensure that you hold the solid portion of the plug. Pulling on the flexible portion of the cord may damage or expose the wire and insulation, creating the potential for fires and electrical shocks.

- **Do not cut, alter or place heavy items on the power adapter cord.**
  Any of these actions may cause an electrical short circuit, which may lead to fire or electrical shock.

- **Use only the recommended power accessories.**
  Use of power sources not expressly recommended for this IR camera may lead to overheating, distortion of the IR camera, fire, electrical shock or other hazards.

- **Do not place the batteries near a heat source or expose them to direct flame or heat.**
  Neither should you immerse them in water. Such exposure may damage the batteries and lead to the leakage of corrosive liquids, fire, electrical shock, explosion or serious injury.

- **Do not attempt to disassemble, alter or apply heat to the batteries.**
  This is serious risk of injury due to an explosion. Immediately flush with water any area of the body, including the eyes and mouth, or clothing, that comes into contact with the inner contents of a battery. If the eyes or mouth contact these substances, immediately flush with water and seek medical assistance.

- **Avoid dropping or subjecting the batteries to severe impacts that could damage the casings.**
  It could lead to leakage and injury.

- **Do not short-circuit the battery terminals with metallic objects, such as key holders.**
  It could lead to overheating, burns and other injuries.

- **Before you discard a battery, cover the terminal with tape or other insulators to prevent direct contact with other objects.**
  Contact with the metallic components of other materials in waste containers may lead to fire or explosions. Discard the batteries in specialized waste facilities if available in your area.

- **Use only recommended batteries and accessories.**
  Use of batteries not expressly recommended for this equipment may cause explosions or leaks, resulting in fire, injury and damage to the surroundings.

- **Disconnect the compact power adapter from both the IR camera and power outlet after recharging and when the IR camera is not in use to avoid fires and other hazards.**
  Continuous use over a long period of time may cause the unit to overheat and distort, resulting in fire.

- **Do not use the battery charger or compact power adapter if the cable or plug is damaged, or if the plug is not fully inserted into the power outlet.**
  The battery charger varies according to region.

- **Exercise due caution when screwing on the separately sold tele-lens, close-up lens.**
  If you loosen, fall off and shatter, the glass shards may cause an injury.

- **If your camera is used for prolong periods, the IR camera body may become warm.**
  Please take care when operating the IR camera for an extended period as your hands may experience a burning sensation.

Prevent Malfunction

Read on to learn about preventing malfunction of IR camera

Avoid Damaging the Detector of the IR Camera

Warning:

- Do not aim the IR camera directly into the sun or at other intense heat source which could damage the detector of the IR camera.
- Do not use the camera in temperatures more than +50°C (+122°F), unless other information is specified in the user documentation or technical data. High temperatures can cause damage to the camera.
- Please do not use the camera in high-temperature conditions more than 350℃, damage to the camera may occur.
- The temperature range through which you can remove the electrical power from the battery is -15°C to +50°C (+5°F to +122°F), unless other information is specified in the user documentation or technical data. If you operate the battery out of this temperature range, it can decrease the performance or the life cycle of the battery.

Avoid Condensation Related Problems

Moving the IR camera rapidly between hot and cold temperatures may cause condensation (water droplets) to form on its external and internal surfaces.

You can avoid this by placing the IR camera in the plastic case (bundle) and letting it adjust to temperature changes slowly before removing it from the case.

If Condensation Forms Inside the IR Camera

Stop using the camera immediately if you detect condensation.

Continued use may damage the IR camera. Remove the PC card, and battery or a household power source from the IR camera and wait until moisture evaporates completely before resuming use.

- **Extended Storage**

When not using the IR camera for extended periods of time, remove the battery from the IR camera or battery charger and store the IR camera in a safe place. Storing the IR camera for extended periods with battery installed will run down the battery.

- **General**

Infrared inspection of gas leaks and high-temperature applications—including infrared image and other data acquisition, analysis, diagnosis, prognosis, and reporting—is a highly advanced skill. It requires professional knowledge of thermography and its applications. So, we strongly recommend that you seek the necessary training before carrying out inspections.

Component Guide

Front View

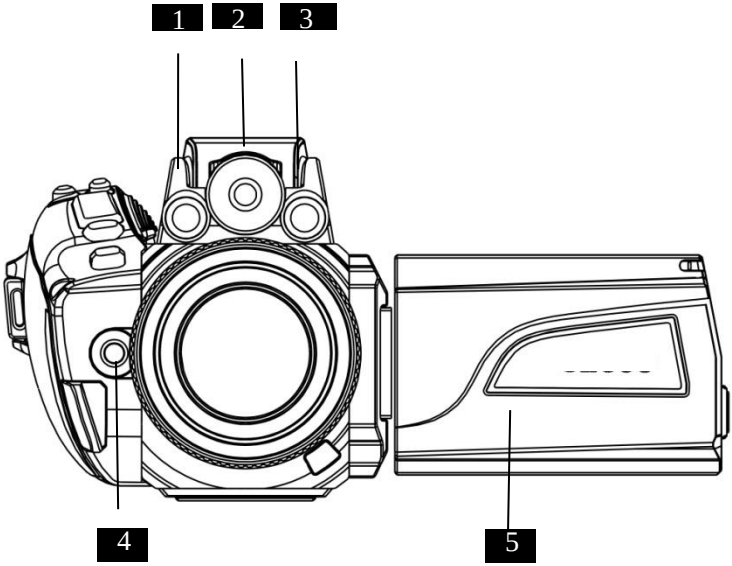

1	CCD indicator lamp	**4**	Laser
2	High definition digital camera	**5**	External LCD
3	CCD indicator lamp		

Planform View

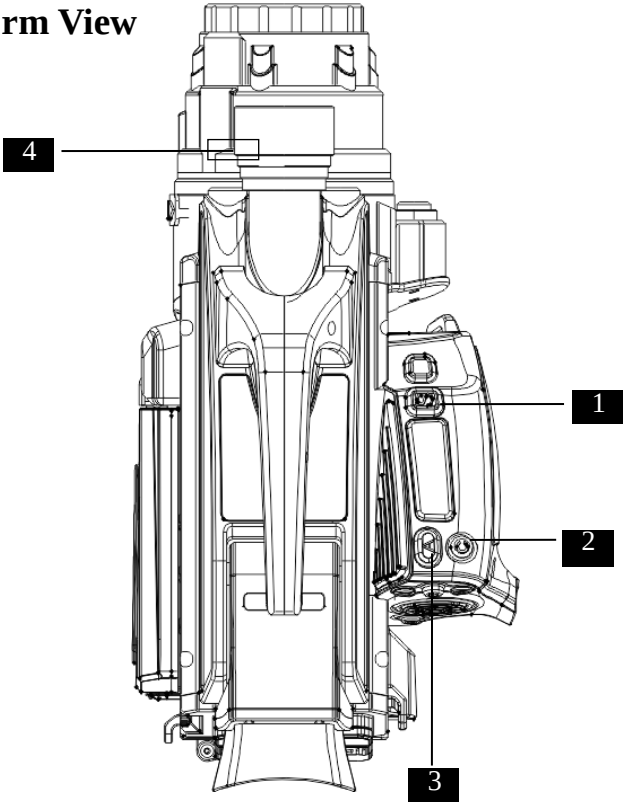

1	S - freeze/ long-press save key	**3**	Press A: Shutter adjustment. Press and hold A: Switch from auto and manual mode
2	Parameter adjustment	4	Temperature range switch key

Back View

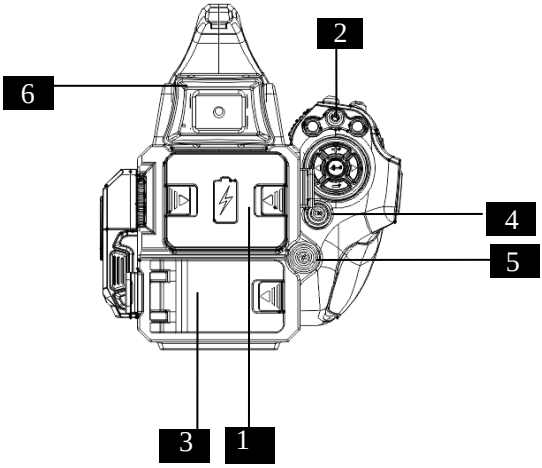

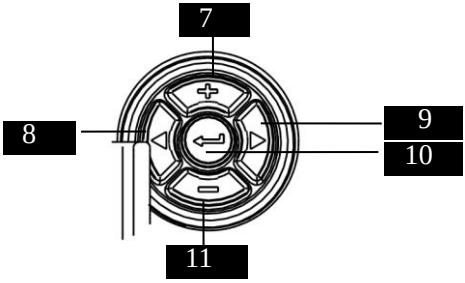

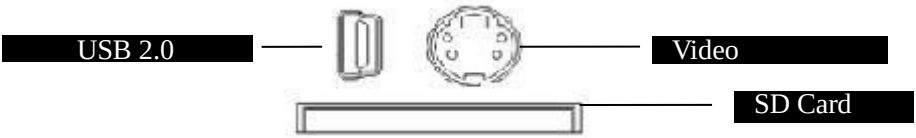

1	Battery case	**7**	Focus+ (auto-mode) Span+ (manual mode)
2	Power Switch	**8**	Level+ (manual mode) Digital zoom 1-8(auto mode)
3	Interface (USB2.0, Video interface, SD card)	**9**	Level- (manual mode) Digital zoom 8-1(auto mode)
4	Video record shortcut key	**10**	Auto-focus
5	External power	**11**	Focus- (auto mode) Span- (manual mode)
6	View finder		

Side View

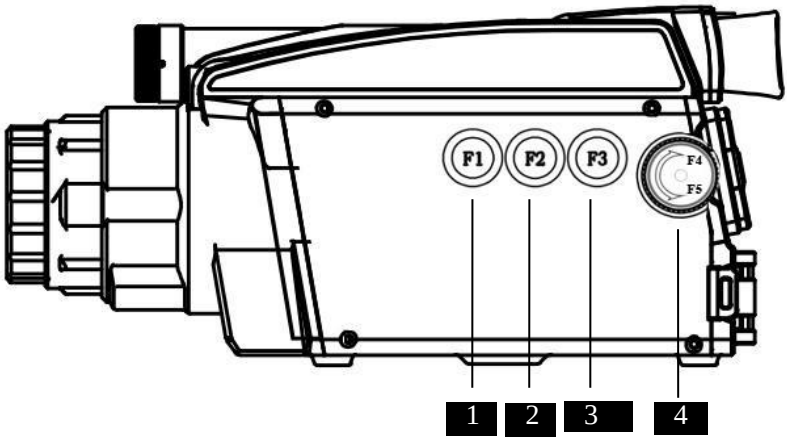

1	F1 key to switch display between visible and IR.
2	F2 key to choose palette
3	F3 to have digital zoom (Short time click: 1-8x; Long time click: 8-1x)
4	F4 enter into sensitive mode
	F5 quit Trace Mode

Preparing the IR Camera

Charging the Battery Pack

When the camera is connected to external power, please plug in the right jack and ensure the camera is power off.

Use the following procedures to charge the battery pack when the low battery icon appears on the display panel.

1 Align the edge of the battery pack with the line on the battery, and then slide the battery in the direction of the arrow.

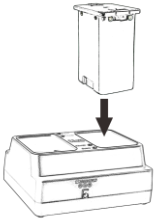

2 Attach the power cord to the battery charger and plug the other end into a power outlet.

- The ‘charge’ indicator lights show red while the battery pack is charging and show green when charging is completed.
- After charging, unplug the battery charger and remove the battery pack.

- This is a lithium ion battery pack so there is no need to deplete the battery or discharge it before recharging. It can be recharged at any time. Moreover, you are recommended to only charge the battery pack after having discharge it completely in order to prolong battery life.
- Charging times will vary according to the surrounding humidity and battery pack state of charge.

Battery Pack Handling Precautions

- Keep the battery pack and camera terminals clean at all times. Dirty terminals may cause a poor contact between the battery pack and IR camera. Polish the terminals with a tissue or a dry cloth before charging or using the battery pack.
- Do not cover the battery charger with anything, such as a tablecloth, cushion or blanket when it is charging. Heat will build up internally and possibly lead to fire.
- Do not charge batteries other than Battery Pack KC3820 with the supplied equipment. This may cause a malfunction.
- The battery pack continues to discharge a small amount when left in the camera even if it is powered off. This shortens the battery life. Remove the battery pack from the camera when it is not in use.
- Do not allow any metal objects such as key rings to touch the terminals, as it can damage the battery pack. To carry the battery pack, or store it when not used, always place it in the supplied case and store it in a cool and dry place.
- Charged battery packs will discharge naturally. To ensure a full charge, you are advised to charge the battery before using it.
- Since storing a fully charged battery pack for a long period of time (about 1 year) will shorten its lifecycle or affect the performance, you are recommended to use the battery pack in the IR camera until the low battery icon appears and store it at normal temperature (30℃) or lower. If you do not use the battery pack for a long period of time, fully charge and then discharge it in the camera at least once a year before returning it to storage.
- The camera consumes battery when the power is on but no function is being used. To conserve battery, power off the IR camera when it is not in use.
- Although the battery pack's maximum operation range is 0 to 40℃, the optimal range is 10 to 30℃. At low temperatures, performance will temporarily decline, deducting the working time before recharging.
- If the working time of a battery pack diminishes substantially even when the battery pack is fully charged, it should be replaced.

V80 User Guide

Power on the IR camera

1 Press and hold the power switch for 3 seconds.

- The power indicator lights green.

Note: When you turn on the camera, a mechanical cooler will begin cooling down the infrared detector. The cooler has a sound that resembles a subdued motor. This sound is normal. The cooling procedure will typically take 5 minutes for SATIR, V80.

2 Around 5 minutes, a startup image will appear on the screen.

⚠ Do not operate the IR camera when it is started up.

Choose suitable temperature range

Press **"Parameter adjustment"** button and **left/right button of five direction operation keys** to choose a suitable temperature range for your object.

Long-press **"Parameter adjustment"** button to confirm the temperature range and leave the setup mode.

Note:

Please do not use the camera in high-temperature conditions more than 350℃, damage to the camera may occur.
The temperature range through which you can remove the electrical power from the battery is -20°C to +50°C, unless other information is specified in the user documentation or technical data. If you operate the battery out of this temperature range, it can decrease the performance or the life cycle of the battery.

V80 gas leakage detection mode

V80 is latest gas detector with uncooled thermal imaging technology, which the function of both gas detection and temperature measurement.

Advise for detection weather: sunny day, under normal temperature.
V80 detection mode: normal detection mode and trace mode.

⚠ Gas leakage detection can operate only under low temperature measurement range (-20°C to 60°C)!

1 Normal Detection Mode:

V80 can detect massive gas leakage after power on.
Press F4 to enter ***Trace Mode*** for effective detection. Meanwhile, V80 can detect the source of leakage from close distance under ***Normal Detection Mode.***

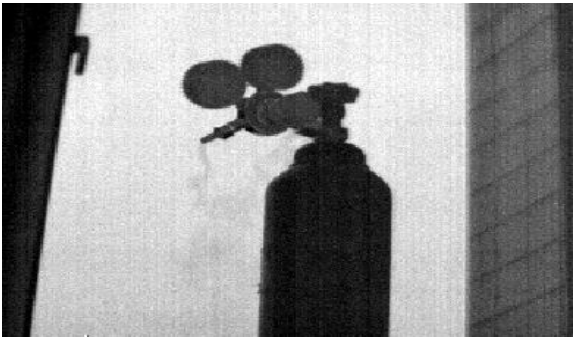

2 Trace Mode

First, please use tripod to fix V80 and ensure the stability.

Second, using V80 to aim at target object and adjust focus until the image is sharp and clear.

Press F4 enter ***Trace mode I***.

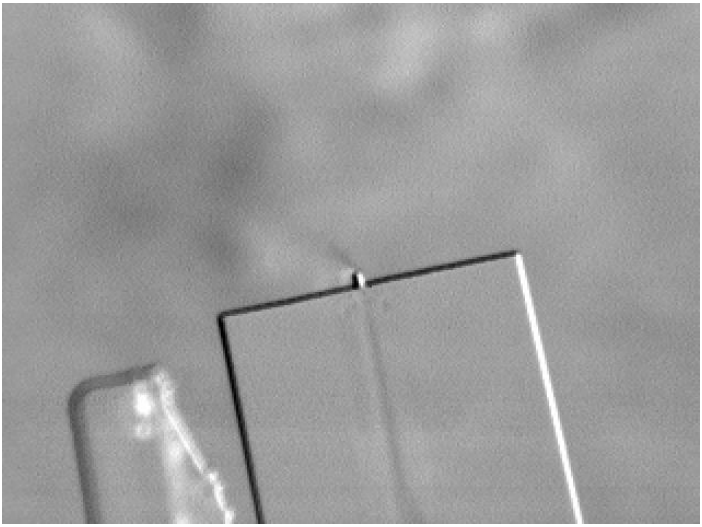

Press ***"F5"*** key to exit Trace mode.

Focus adjustment

Aim the IR camera at the subject.

Do remember to make the subject the image that is shown at the center of the LCD monitor.

Keep the target at the center of image, make image clear by Auto focus or Manual focus.

Please kindly check the focus operation button through *V80 quick start*.

Auto-focus & Manual focus.

Image Zooming

Digital zoom: 1-8X

1 Click F3 on the side of the camera.

2 Click the left or right key of five directional keys on the side of camera.

Freeze Image

1 Press S button to freeze and live the image.

Save Image

3 Aim the IR camera at the subject and adjust focus to get the best image, and freeze the screen and have a long time press of freeze button.

Video record

1 Press the video record shortcut key to enter ***Rec video*** interface.

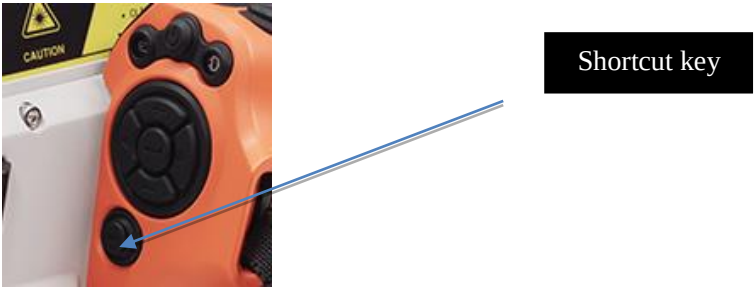

Turn on/off Laser Pointer

Set the custom key for laser pointer and press this key to switch ***On and off*** the laser pointer.

ⓘ Do not trigger the laser pointer in human or animal eyes. Exposure to the laser produced by the laser pointer may damage eyesight.

Parameter Adjustment

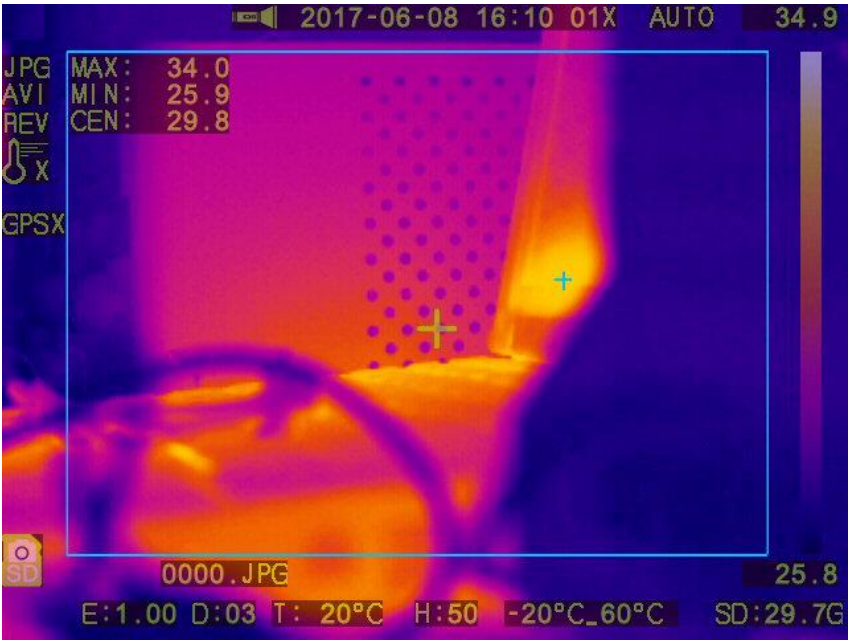

◀ = Left button of five-direction operation keys

▶ = Right button of five-direction operation keys

+ = Up button of five-direction operation keys

- = Down button of five-direction operation keys

Emissivity and distance setting: Press parameter adjustment Button "C" to E:1.00 D:03 and E means emissivity and D means distance. Press

◀ or ▶ to select the numerical value you want change and press + or - to change the numerical value.

Ambient temperature and humidity setting: Press parameter adjustment Button “C” to T: 20°C H:50 and T means ambient temperature and H means humidity. Press ◀ or ▶ to select the numerical value you want change and press + or - to change the numerical value of ambient temperature and humidity.

Temperature measurement unit setting: Press parameter adjustment Button “C” to -20°C_60°C and press + or - to change the degree-day (℃/° F).

Turnning on or off the lamp: Press parameter adjustment Button “C” to and press + or - to turn it on and off.

Date and time setting: Press parameter adjustment Button “C” to 2017-06-08 16:10. Press ◀ or ▶ to select the numerical value you want change and press + or - to change numerical value.

File Format setting: Press parameter adjustment Button “C” to IMA IRV and Press ▶ to change file format from IRV and IMA to JPG and AVI format JPG AVI.

Image review: Press parameter adjustment Button “C” to 

and Press “F1” button to review saved images. Press “F1” button again to be out of review images.

Alarm setting: Press parameter adjustment Button “C” to  and Press “F1” button to set alarm temperature 

. Press ◀ or ▶ to select the numerical value you want change and press **+** or **-** to change the numerical value of alarm temperature. If the temperature higher than the alarm setting temperature, there will be a alarm sigal  in the screen of camera and image. Press “F1” button again to be out of alarm.

GPS information setting: Press parameter adjustment Button “C” to 

and press **+** or **-** to turn GPS information on and off.

Note:

When you want to focus, save images, record video, please make sure you are out of parameter adjustment. Long-time press parameter adjustment Button “C” to be out of parameter adjustment.

Power off the IR camera

Hold the power switch for 3 seconds.

- The power indicator goes off

Download from SD card to PC

1 Eject the SD card from the IR camera

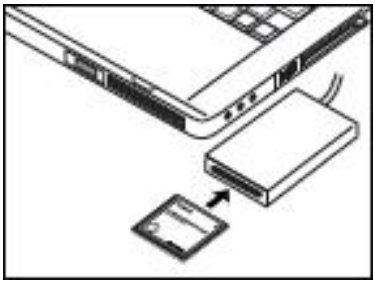

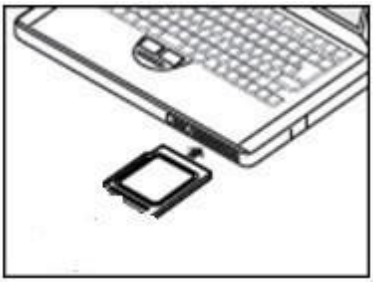

2 Insert SD card into the SD card reader connected to a computer

3 Copy images from the card into a folder of your choice on the hard disk.

Achieving high quality image

Though infrared gas leak detection is a highly advanced skill required necessary training before carrying out inspections and it requires professional knowledge of thermography, there are settings you need to experiment with for high quality image.

- Adjusting the infrared camera focus.

An adjustment method that will automatically adjust the image for best brightness and contrast. For the button of focus, please kindly check the *V80R quick start*. When using manual mode, please use auto-focus.

- Selecting a suitable temperature range.

Press **"Parameter adjustment"** button and **left/right button of five direction operation keys** to choose a suitable temperature range for your object.
Long-press **"C" Parameter adjustment** button to confirm the temperature range and leave the setup mode.

- Selecting a suitable color palette.

Please press F2 key to choose palette. Generally, propose to use black white or white black palette.

- Adjusting the image, using Auto or Manual mode.

Press **"A"** button to switch between auto and manual mode.
Under Auto mode, it will automatically adjust the image for best brightness and contrast.
Under manual mode:
To change the temperature level, press the **left/right button of five direction operation keys.**
To change the temperature span, **press the up/down button of five direction operation keys**

- Changing other parameters.

The camera can set following object parameters:

Emissivity, i.e., how much radiation an object emits, compared to the radiation of a theoretical reference object of the same temperature (called a "blackbody"). The opposite of emissivity is reflectivity. The emissivity determines how much of the radiation originates from the object as opposed to being reflected by it.
Press **"Parameter adjustment"** button to manual "**E**" and **left/right button of five direction operation keys** to choose a suitable emissivity.
Object distance, i.e., the distance between the camera and the target. Press **"Parameter adjustment"** button to manual **"D"** and **up/down button of five direction operation keys** to choose distance.

Ambient temperature, i.e., press **"Parameter adjustment"** button to manual "**T**" and **left/right button of five direction operation keys** to choose a suitable ambient temperature.

Relative humidity, i.e., the relative humidity of the air between the camera and the object of interest. Press **"Parameter adjustment"** button to manual **"D"** and **up/down button of five direction operation keys** to set

humidity.

Note:
For camera buttons' detailed functions, please kindly check *SATIR V80 quick start.*

Safety

The areas where the camera is designed to be used are potentially dangerous unless you familiarize yourself with and follow local safety rules and regulations at the site where you are working. Below is some advice to keep in mind while using the camera on site:

- Change the battery outside operating areas only
- When climbing ladders or stairs, put the lens cap on and use the camera strap to free both your hands
- If you detect a large leak or potential serious condition, immediately stop your work, move upwind and quickly notify the relevant personnel
- When you detect a leak, make sure you are not "in" the leak when you make a video
- Keep the connector cover on the back of the camera closed when in potentially combustible atmosphere
- Make a quick scan from a distance before entering an operating unit to avoid entering a "cloud" of gas
- Take note of the wind directions and know your surroundings should you have to leave quickly

Troubleshooting

Problem	Cause	Solution
Camera will not operate.	Power may be off.	• Turn on the camera. See Turning the Power On/Off.
	Insufficient battery voltage	• Fully charge the battery.

	Poor contact between camera and battery terminals	• Wipe the terminals with a clean and dry cloth.
Camera will not record.	SD card may be full.	• Insert a new SD card. • If possible, download the images to a computer and erase them from the SD card to make some space.
	SD card may not be recognized.	• **Format SD card to FAT32.** • If reformatting doesn't work, the SD card logic circuits may have been damaged. Contact Local Service Department.
Battery pack will consume quickly.	Battery pack may have been in disuse for one year or more after being fully charged.	• Replace the battery pack with a new one.
	Battery life may exceed.	• Replace the battery pack with a new one.
Battery pack will not charge.	Poor contact between battery pack and battery charger.	• Clean the battery terminals with a clean cloth. • Connect the power cord to the battery charger and insert its plug firmly into the power outlet.
	Battery life may exceed.	• Replace the battery pack with a new one.

Use the following procedures to clean the camera body, lens, LCD monitor and other parts.

Camera body	Wipe the body clean with soft cloth or eyeglass lens wiper.
Lens	**First use a lens blower brush to remove dust and dirt, and then remove any remaining dirt by wiping the lens lightly with soft cloth.** • Never use synthetic cleaners on the camera body or lens.
LCD monitor	**Use a lens blower brush to remove dust and dirt. If necessary, gently wipe the LCD monitor with soft cloth or an eyeglass lens wiper to remove stubborn dirt.** • Never rub or press forcefully on the LCD monitor. These actions may damage it or lead to other problems.

Never use thinners, benzene, synthetic cleaners or water to clean the camera. These substances may distort or damage the equipment.

Material	Temperature (℃)	Emissivity
Metals		
Aluminum		
Highly polished	100	0.09
Commercial sheet	100	0.09
Lightly oxidized	25~600	0.10~0.20
Heavily oxidized	25~600	0.30~0.40
Brass		
Brass lens, highly polished	28	0.03
Oxidized	200~600	0.61~0.59
Chromium		
Polished	40~1090	0.08~0.36
Copper		
Copper lens	100	0.05
Highly oxidized	25	0.078
Cuprous oxide	800~1100	0.66~0.54
Liquid cupper	1080~1280	0.16~0.13
Gold		
Gold lens	230~630	0.02
Iron		
Cast, polished	200	0.21
Cast, machined	20	0.44
Rusty surface	20	0.69
Cast (oxidized at 600℃)	198~600	0.64~0.78
Electrolytic, oxidized	125~520	0.78~0.82

Oxidized	500~1200	0.85~0.89
Material	**Temperature (℃)**	**Emissivity**
Metals		
Iron plate	925~1120	0.87~0.95
Cast, highly oxidized	25	0.80
Thawy surface	22	0.94
Cast, thawy	1300~1400	0.29
Liquid	1515~1680	0.42~0.45
Steel		
Steel (oxidized at 600℃)		
Oxidized	100	0.74
Mild steel, thawy	1600~1800	0.28
Liquid	1500~1650	0.42~0.53
Lead		
Pure lead (unoxidized)	125~225	0.06~0.08
Lightly oxidized	25~300	0.20~0.45
Magnesium		
Magnesium oxidized	275~825	0.55~0.20
Mercury	0~100	0.09~0.12
Nickel		
Electroplated, polished	25	0.05
Electroplated, unpolished	20	0.01
Filament	185~1010	0.09~0.19
Nickel plate (oxidized)	198~600	0.37~0.48
Oxidized	650~1255	0.59~0.86

Nickel alloys		
Material	**Temperature (℃)**	**Emissivity**
Metals		
Nichrome, wire (heat resistant)	50~1000	0.65~0.79
Nichrome	50~1040	0.64~0.76
Nichrome (heat resistant)	50~500	0.95~0.98
Silver		
Polished	100	0.05
Stainless steel		
18-8	25	0.16
304 (8Cr, 18Ni)	215~490	0.44~0.36
310 (25Cr, 20Ni)	215~520	0.90~0.97
Tin		
Commercial tin plate	100	0.07
Zinc		
Oxidized at 400℃	400	0.01
Iron plate, galvanized, bright	28	0.23
Gray oxidized	25	0.28

Material	Temperature (℃)	Emissivity
Non-metals		
Brick	1100	0.75
Firebrick	1100	0.75
Graphite (lampblack)	96~225	0.95
Porcelain (white)	18	0.90
Asphalt	0~200	0.85
Glass	23	0.94
Glass, heat resistant	200~540	0.85~0.95
Wall powder	20	0.90
Oak	20	0.90
Carbon sheet		0.85
Insulation sheet		0.91~0.94
Metal sheet		0.88~0.90
Glass pipe		0.90
Loop		0.87
Porcelain goods		0.90
Porcelain flower pattern		0.83~0.95
Solid material		0.80~0.93
Capacitor		
Revolving type		0.30~0.34
Porcelain		0.90
Film		0.90~0.93
Talc		0.94~0.95
Talc, flume type		0.90~0.93
Glass		0.91~0.92
Semiconductor		
Transistor (plastic)		0.80~0.90

Transistor (metal)		0.30~0.40
Material	**Temperature (℃)**	**Emissivity**
Non-metals		
Diode		0.89~0.90
Transmission loop		
Impulse transmission		0.91~0.92
Chalky layer, flat		0.88~0.93
Top ring		0.91~0.92
Electronic material		
Epoxy glass plate		0.86
Epoxy phenol plate		0.80
Filled gold copper sheet		0.30
Copper, with solder coating		0.35
Lead wire, with tin coating		0.28
Copper, filament		0.87~0.88

After Sales Service & Statement

After Sales Service

We hereby giving guarantee that all material/equipment to be furnished new and unused and shall be first class in every particular case and shall be free from defects. We further warrants that the goods will be new, merchantable of the most suitable grade and fit for their intended purposes.

The Instruments will be guaranteed against manufacturer defects for 12 months from the date of receipt.

This product is warranted against defective materials and workmanship for a period of one (1) year from the delivery date of the original purchase, provided such products have been under normal storage, use and service and in accordance with SATIR's instruction. SATIR will repair or replace, at its option, the defective product with reasonable charge subject to misuse, neglect, accident or abnormal conditions of operation.

Statement

SATIR follows the policy of development. Therefore, SATIR has the right to modify and develop the hardware and software of this product, and this operation manual without prior notice